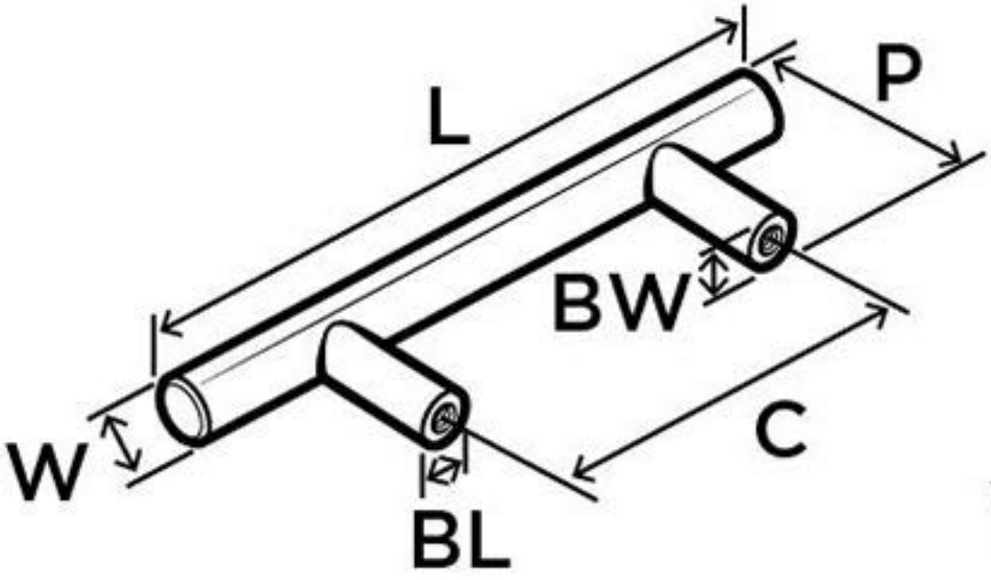

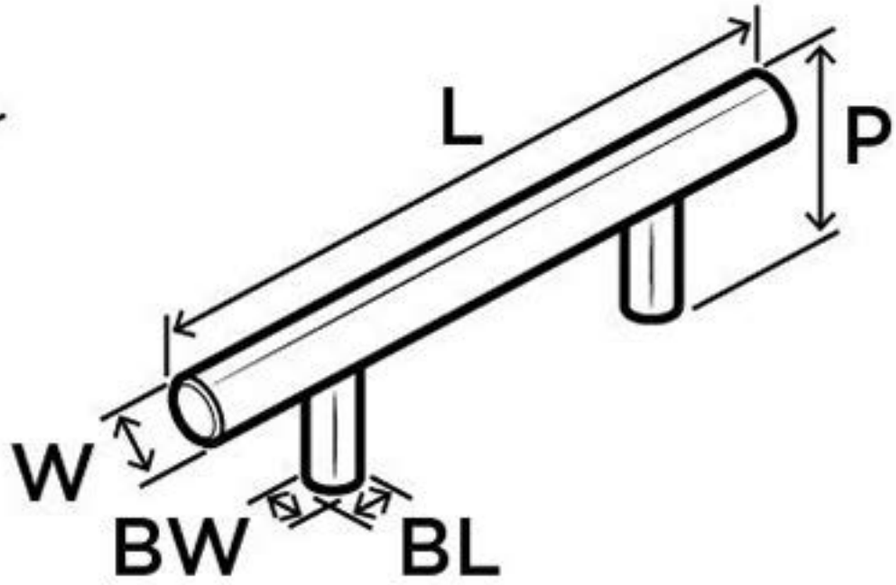

L (Length) = **5-3/8in**(137mm)
W (Width) = **1/2in**(13mm)
P (Projection) = **1-3/8in**(35mm)
C (Center-to-Center) = **3in**(76mm)
BL (Base Length) = **3/8in**(10mm)
BW (Base Width) = **3/8in**(10mm)

Profile# 19010